ELECTROMAGNETIC FLOW METER

WMAG 30

INSTALLATION AND OPERATING INSTRUCTION

Table of Contents

1.Assembly and Installation

1.1 Inspection

Before installing the electromagnetic flowmeter system, check for the mechanical damage due to possible mishandling during the shipment. All claims for damage are to be made promptly to the shipper before installing flowmeter.

1.2 Transport General

Note when transporting the instrument to the meter installation site:

- The center gravity may be off-center;
- The protection plates or caps mounted on the process connections for PTFE/PFA lined metes should only be removed just prior to install instrument in the pipeline;
- Care must be exercised to assure that the liner is not cut off or damaged during installation to avoid leaks
- Flanged meters should not be lifted by the converter housing or connection housing.

Warning!

The center of gravity of the complete instrument may be above the lifting points of the straps.
Injury may result if the instrument does not unintentionally slip or rotate during transport.

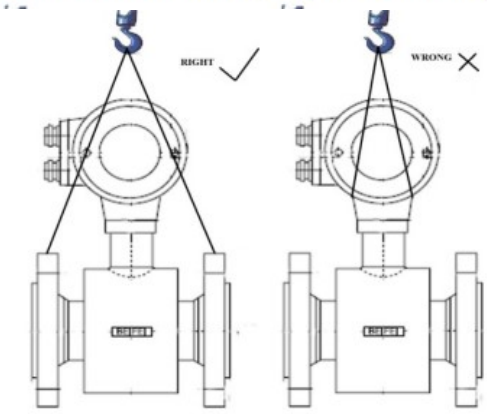

Fig1: Transport of flanged instrument

2. Installation

Location and position as required, but electrode axis must be approximately horizontal.

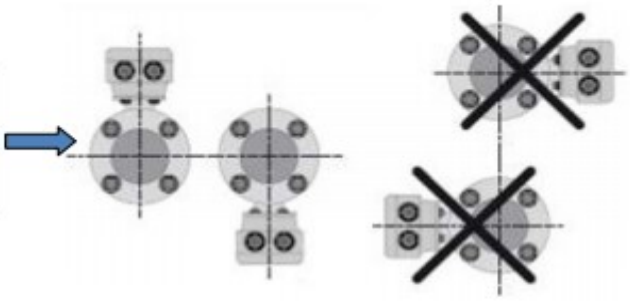

- Pipes must be complete filled at all times
- Flow direction-Avoid top/bottom
- Ensure there is sufficient clearance for installation and maintenance work.

Straight inlet run pipeline minimum of 5×DN and outlet 2×DN(DN=meter size) measured from electrode axis.

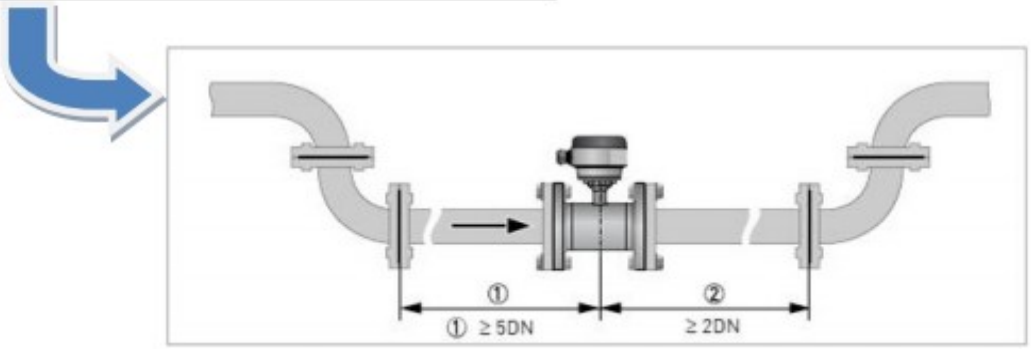

- Support the pipeline on the both sides of the flowmeter to minimize vibrations
- Do not install flowmeter in vicinity of strong electromagnetic fields.
  Such as: High-tension electrical cables
- Install protective rings for plastic pipes and internally coated metal pipelines for proper grounding.

Some Typical Installations

A:

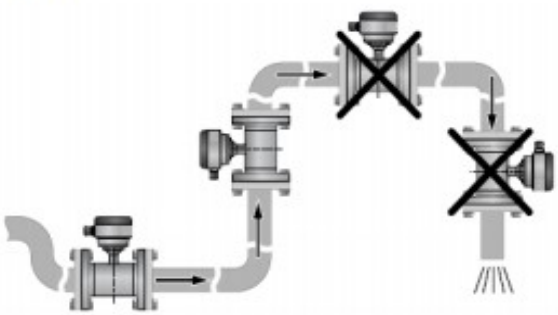

- The bottom and the left stand ---(pipe is fully filled)
- The top ,highest point of pipe run(Air bubbles accumulate in measuring tube causing incorrect or unstable measurements)
- The right position doesn't create a fully filled pipe condition causing unstable or inaccurate reading

B:

- Install in slightly ascending pipe section. If not possible, ensure adequate velocity to prevent air ,gas or vapour from concentrating in the flow sensor.
- Install flow sensor in lower section of pipe
- Install air valve and downstream of flowmeter. Negative pressure(Vacuum) may damage the Lining

C:

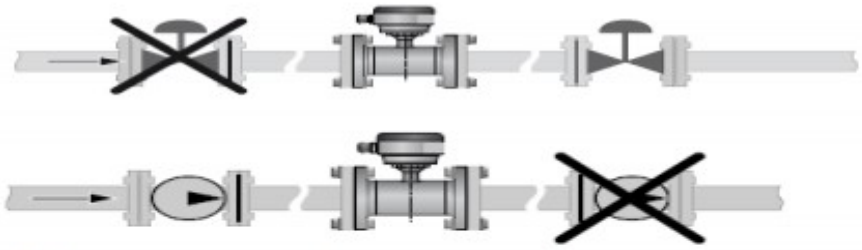

- Always install control and shutoff valves downstream of flowmeter to avoid flow profile distortion or possible negative pressure.
- Never install flow sensor on pump suction side! May cause damage to the lining.

D: Another. Install flowmeter in bypass for heavily contaminated fluids.

Primary flow sensor in metal pipe

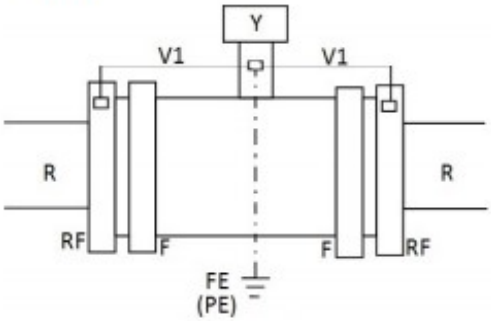

PE: Measuring ground
V1: Grounding wire 10mm^{2}Cu(AWG 7)

Primary flow sensor in plastic pipe or in metal pipe with insulating coating/lining/painting

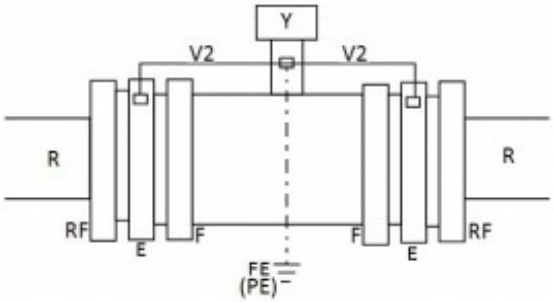

PE: Measuring ground
V1: Grounding wire 10 mm^2 Cu(AWG 7)
E: Grounding rings

Primary flow sensor in pipe rund with cathodic protection

Primary flow sensor must be electrically isolated from the pipe.Protective rings for good grounding are compulsory.

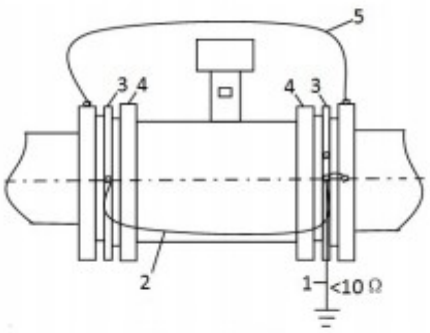

1) Measuring ground
2) Grounding wire 10mm^2Cu(AWG 7)
3) Grounding rings
4) Screw bolts(insulated)
5) Connecting wire 10mm^2Cu(AWG 7)

Installations in Larger Size Pipelines

The flowmeter can readily be installed in larger size pipe lines by using of reducers. The pressure drop resulting from the reduction can determined using the Fig.4 using the following procedure:

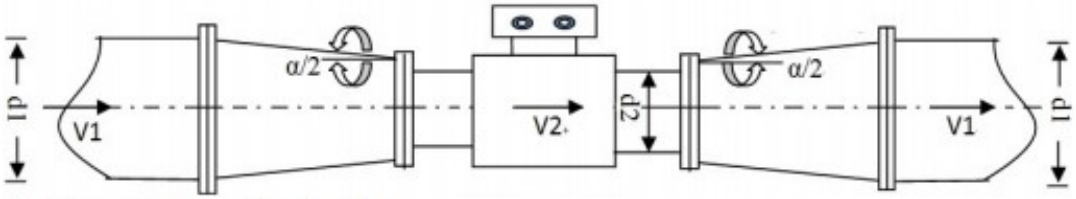

d1=Inside diameter of the pipeline
d2=Inside diameter of the flow sensor
V2=Flow velocity in m/s
α /2≤8°

3. Cable and Wiring Connection

3.1 Cable and Excitation Cable Connections

The electromagnetic flowmeter primary is connected to the converter by a signal/ excitation cable. The magnet coils in the flowmeter primary are supplied from terminals Ext+(7)/ Ext- (8)in the converter with an excitation voltage. The signal /Excitation cable is connected at the flowmeter primary to terminals Sig+(2), Sgnd(1) and Sig-(3). The terminal assignments are described in the picture below. The shield of the cable is at the common potential of the flowmeter primary and connected to earth. The ground connection on the exterior of the connection box of the flowmeter primary should also be-connected to earth.

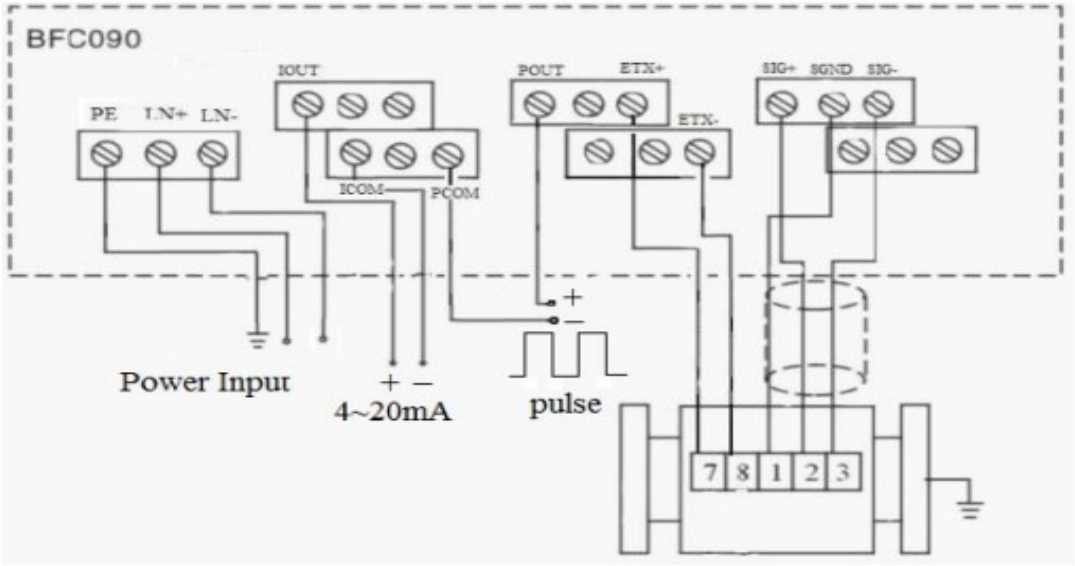

Signal and Excitation Cable Construction

The signal/excitation cable conducts signal of only a few millivolts and should therefore be routed in the shortest manner. The maximum allowable signal cable length is 150m as record, but the flowmeter must combined with the cable when calibrated.

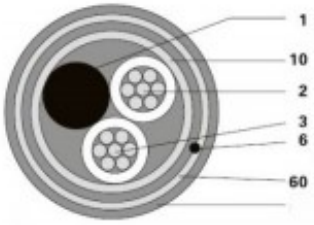

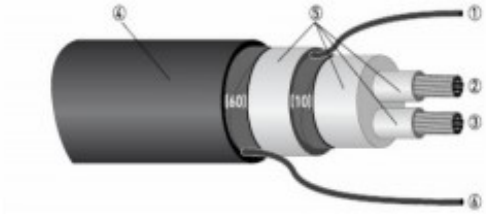

BFC090B (Remote Model)

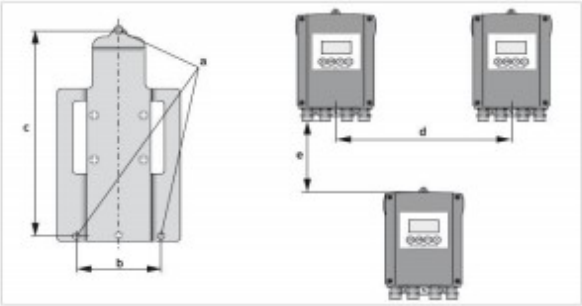

	[mm]	[inches]
a	Ø6.5	Ø0.26
b	87.2	3.4
c	241	9.5
d	310	12.2
e	257	10.1

BFC090K（Compact Model）

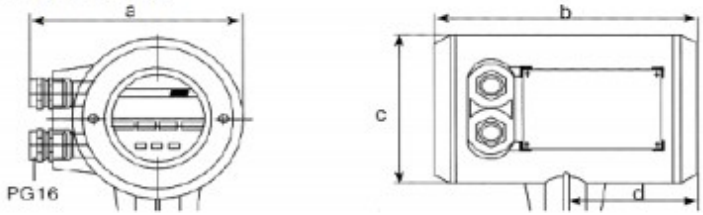

[mm]				重量 [kg]
a	b	c	d	
156	208	Φ 122	102	約4.2

3.3 Terminal Board for Connection

3.3.1 BFC090B

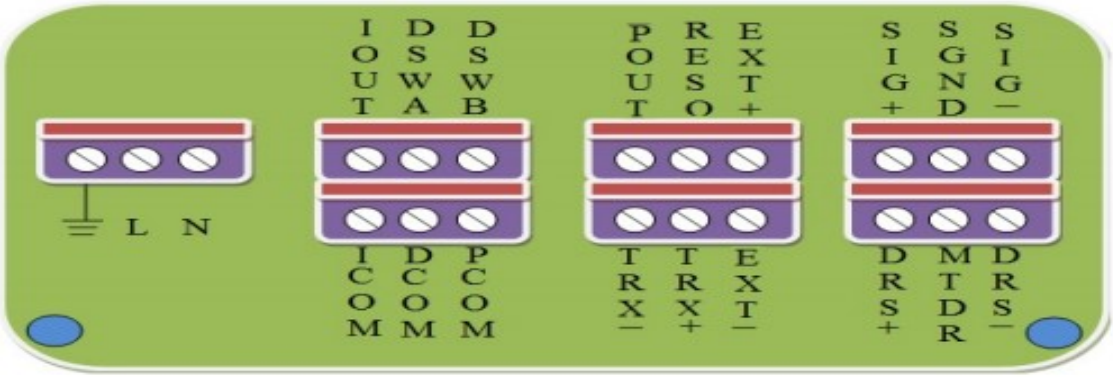

Terminal Assignments	Connection
L;N/ +,-	Power Supply
IOUT ; ICOM	Current output
DSAW; DCOM	High flow rate alarm
DSBW; DCOM	Low flow rate alarm
POUT; PCOM	Pulse output
TRX+; TRX-	Communication protocol(RS485,PROFIBUS)
EXT+; EXT-	Connection for magnetic field excitation (Line 7 and 8)
SIG+; SGND; SIG-	Connection for flow signal(Line 2,Line1,Line3)
DRS+;MTDR; DRS-	Shield for the flow signal(If Need)
RESO	Inner Power Supply(If need, please require in purchase order)

Attention!

The outer supply power connection, please according to the tag in the converter area.

3.3.2 BFC090K

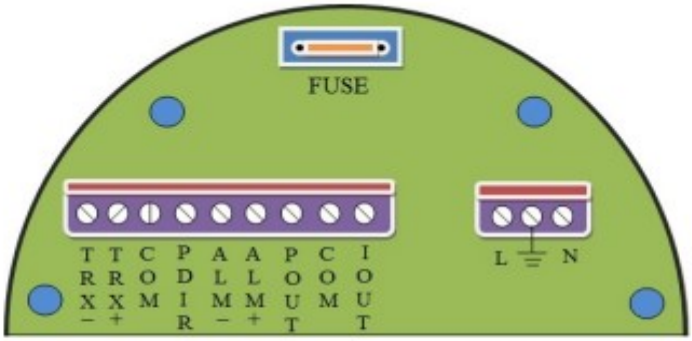

Terminal Assignments	Connection
L;N/ +,-	Power Supply
IOUT ; COM	Current output
POUT; COM	Pulse output
TRX+; TRX-	Communication protocol(RS485,PROFIBUS)

3.3.3 Connection Examples for Peripherals for Analog Communication

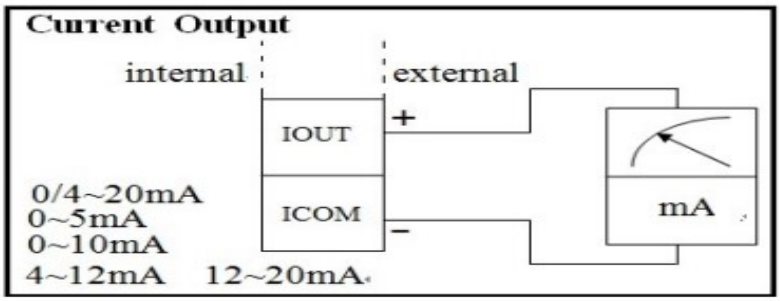

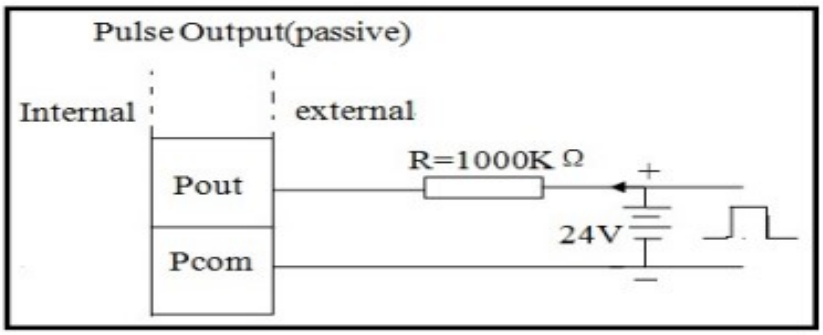

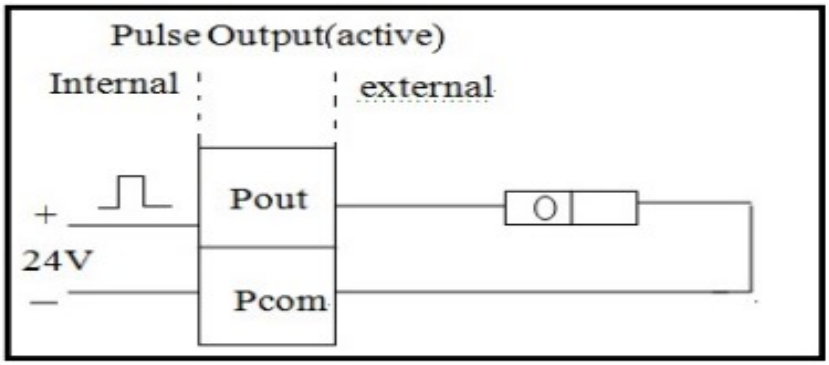

4 Programming the converter

4.1 Available Display Formats

When the supply power is turned on, the process information for the flowmeter is coming displayed.

In the first line the present flow direction and the instantaneous flow rate value in percent or direct reading engineering units is displayed. The Totalizer value(9digits) for the present flow direction is displayed.

The totalizer value displayed is always the actual flow in its units(that already set in the menu) regardless of the pulse factor value. Another totalizer value for the other direction can be displayed by pressing the UP or DOWN key.

Display Formats

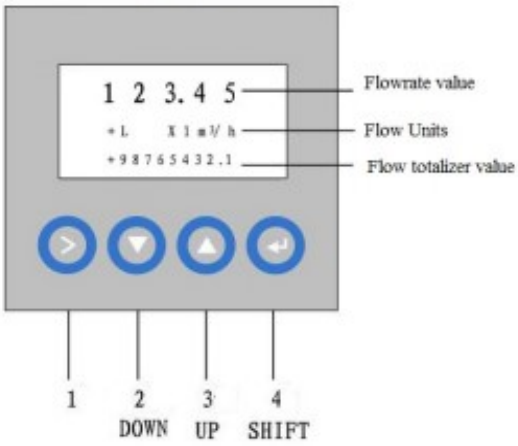

During data entry the converter remains on-line, the current and pulse outputs continue to indicate the actual operating values. The individual functions for the keys are described as below:

NONE This key is a reserved key for further added functions.

Step Down The Step down key is one of the two arrow keys. It can be used to scroll backward through the menus. All desired parameters can be accessed; When in the submenu, the key also used to be in and out the menu.

Step Up The Step up key is one of the two arrow keys. It can be used to scroll backward through the menus. All desired parameters can be accessed;

Enter The Key used to enter the menu, and also used to move the cursor in menu.

When enter the menu from measuring display, press the key, waiting for 3 seconds.

4.2 Menu Formats

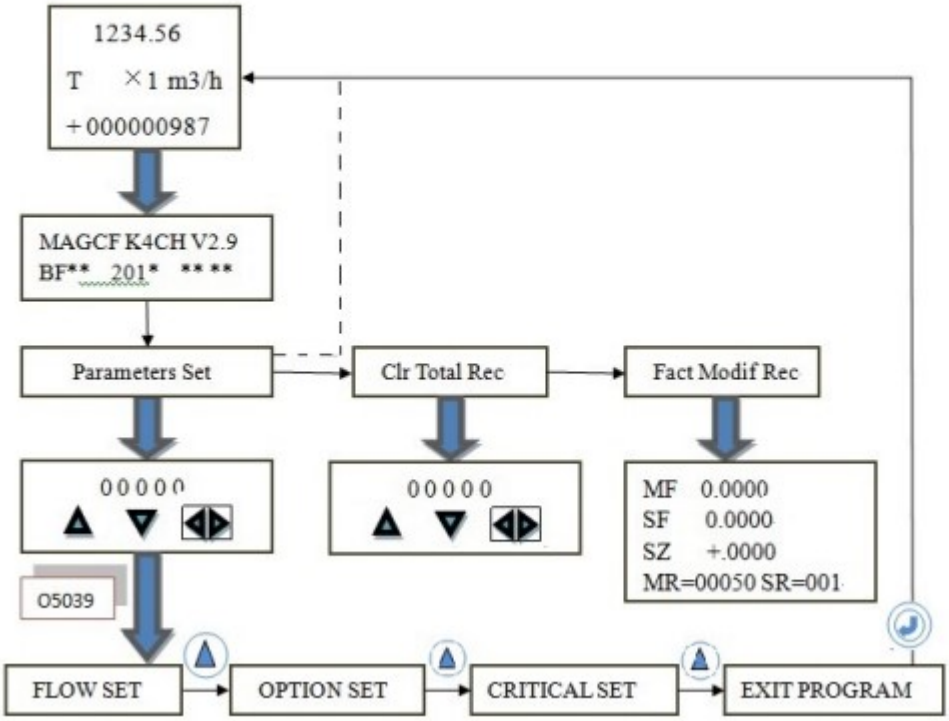

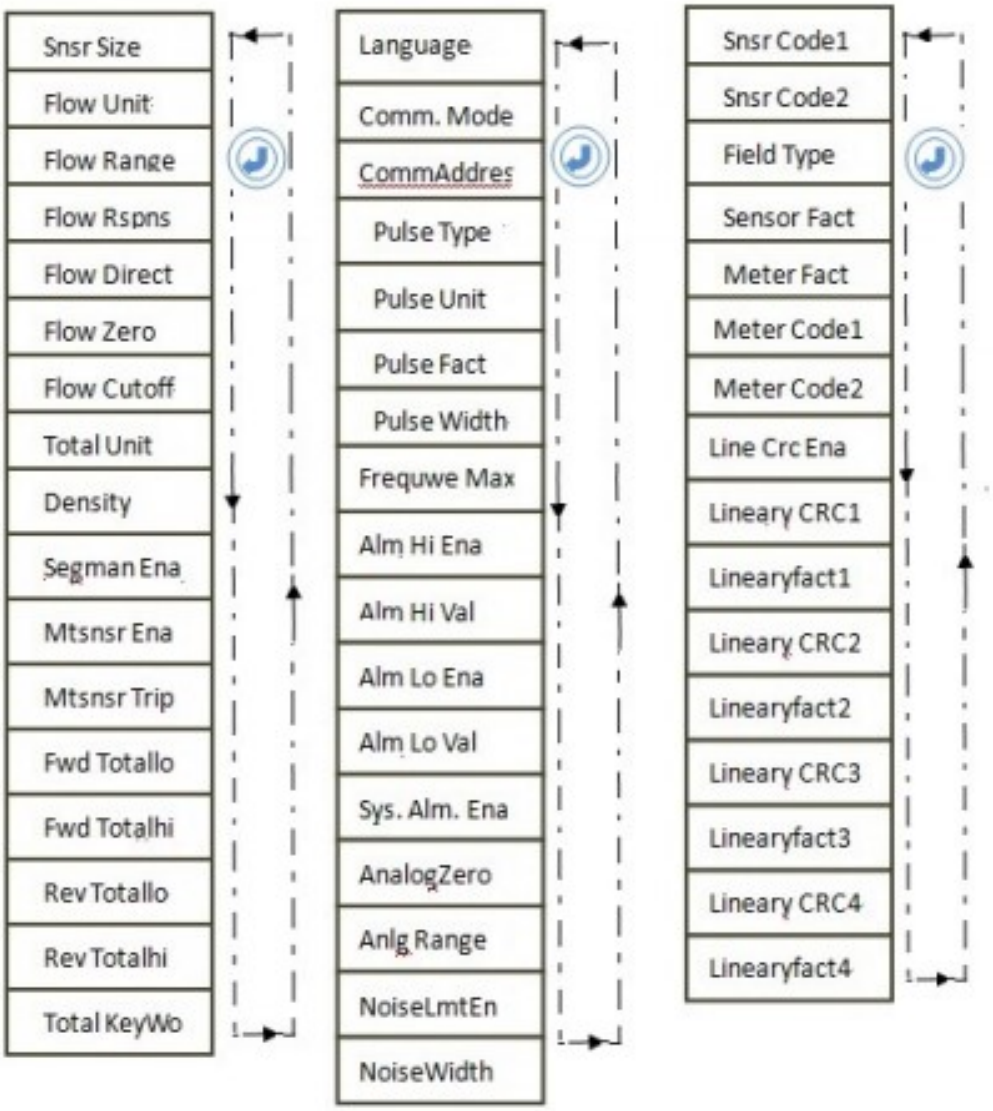
Snsr Size
Flow Unit
Flow Range
Flow Rspns
Flow Direct
Flow Zero
Flow Cutoff
Total Unit
Density
Segman Ena
Mtsnsr Ena
Mtsnsr Trip
Fwd Totallo
Fwd Totalhi
Rev Totallo
Rev Totalhi
Total KeyWo
Language
Comm. Mode
CommAddres
Pulse Type
Pulse Unit
Pulse Fact
Pulse Width
Frequwe Max
Alm Hi Ena
Alm Hi Val
Alm Lo Ena
Alm Lo Val
Sys. Alm. Ena
AnalogZero
Anlg Range
NoiseLmtEn
NoiseWidth
Snsr Code1
Snsr Code2
Field Type
Sensor Fact
Meter Fact
Meter Code1
Meter Code2
Line Crc Ena
Lineary CRC1
Linearyfact1
Lineary CRC2
Linearyfact2
Lineary CRC3
Linearyfact3
Lineary CRC4
Linearyfact4

4.2.1 Menu Function of "FLOW SET"

Sesr Size	converters can be equipped with some deferent sensors that have deferent diameter of measuring pipes. The pipes in deferent diameters from 3mm to 3000mm can be chosen in relative table
Flow Unit	The flow unit can choose the parameters (L/s、L/m、L/h、m^3/s、m^3/m、m^3/h),and the user can choose the proper unit according to the technological requirement and using habit.**Special flow unit also can be custom made. Such as(gal, uton, kgal……)**
Flow range	Flow range means upper limit value, and lower limit value is set "0" automatically. So, it makes the range, and makes the relation of percent display, frequency output and current output with flow
Flow Rspns	The damping can be set between 1s to 60s. The value is the time of filter measure. can enhance the stability of flow display and output digital, and fits for gross add up of pulse flow
Flow Direct	If users think the direct and design are differ, just change the direct parameter is OK, but not change exciting or signal
Flow Zero	Make sure the sensor is full of flow, and the flow is stillness. Flow zero is shown as velocity of flow, mm/s as shown FS = ±0 0 0 0 0 ± 0 0 0 0 .**When the FS value is not 0,adjust the value in second line, to make the FS value down to zero**
Flow Cutoff	The value is the flow value. Applied to the value in the display and all outputs. When the flowrate is below the flow low cut-off value, the flow is no longer measured.
Total Unit	Converter display is counter with 9 bits, and the max is 999999999 Flow integrator value: 0.001L、0.010L、0.100L、1.000L、0.001m3、0.010m3、0.100m3、1.000m3(Other units can be custom made)
Density	If the totalizer values and the flowrate display are to use mass units , then a fixed density value must be entered for the calculation.(To be continued)
Segman Ena	When "SegmaN Ena" is "enable", if the flow backward, the converter will export pulse and current。When it is "disable", the converter will export pulse as "0" and current as "0"(4mA or 0mA) for the flow flows reversals
Mtsnsr Ena	The state of empty pipe can be detected with the function of converter. In the case of Empty Pipe Alarm, if the pipe was empty, the signals of analog output and digital output would be zero and displayed flow would be zero
Mtsnsr Trip	When the pipe is full of liquid (whether flowing or not), the parameter of "Mtsnsr" could be modified more easily. The parameter displayed upper line is real MTP, and the parameter displayed bellow is the "Mtsnsr trip" that should be set. When setting "Mtsnsr trip", you could be according to the real MTP, the value that should be set is usually three to five times of real MTP
Fwd /Rev Totallo/hi	Positive/Negative total volume high byte and low byte can change forthcoming and reverse total value, and be used to maintenance and instead.
Total Key Wo	Set a password, that user can easily remember, then user can clear totalizer value in the menu of "Clr Total Rec" with the password.

4.2.2 Menu Function of "OPTION SET"

Language	Language choose, usually can choose Chinese, English. **Special language can be special ordered**
Comm. Mode	Can choose the communication protocol, including MODBUS, HART, Profibus
CommAdress	It means this instrument's address when communicates with many, and has 01~99
Pulse Type	Two kinds of Pulse Outputs are can be chosen: Frequency Output and Pulse Output. Frequency Output is continuous square waveform and Pulse output is a serial wave of square wave
Pulse Unit	Means the Unit of one pulse value, including m3 and L
Pulse Fact	Equivalent pulse Unit is referred to one pulse for value of flow.，Under the cooperation between "Equivalent pulse Unit" and "Pulse Equivalent", the Pulse Equivalent can be set.
Pulse Width	The pulse output is of the low level effective, with a impulse width of 01---500ms
Frequ Max	Frequency output range is as the upper limit of flow measure, just the percent flow 100%. Frequency output upper limit can be selected between 1～5000Hz
Alm Hi Ena	Users can choose "Enable" or "Disable". It decide if the alarm function working when the flow rate over the value set in next menu.
Alm Hi Val	The parameter of upper limit alarm is percentage of flow range and can be set in the way of setting one numerical value between 0%~199.9%.When the value of flow percentage is larger than the value of setting value, the converter outputs the alarm signal
Alm Lo Ena	Users can choose "Enable" or "Disable". It decide if the alarm function working when the flow rate smaller than the value set in next menu.
Alm Lo Val	The same as upper limit alarm
Sys Alm . Ena	Selecting Enable will have the function, and selecting Disable will cancel the function
AnalogZero	After long time using.the 4mA maybe removed, modify the data in menu to make the current output re-back to 4mA
Anlg Range	After long time using.the 20mA maybe removed, modify the data in menu to make the current output re-back to 20mA
NoiseLmt Ena	For paper pulp, slurry and other serosity, the flow measure will have "cuspidal disturb", because the solid grain friction or concussion the measure electrode. BFG converters use variation restrain arithmetic to conquer the disturbing by designing three parameters to select disturb character
NoiseLmt Width	Peak Control Parameter filters according to different burr disturber. In this design burr disturber is filtered on the basis of flow velocity. When flow velocity fluctuation is bigger than set value, it will not be filtered. When flow velocity fluctuation is less than set value, it will be filtered

4.2.3 Menu Function of "CRITICAL SET"

Snsr Code1/Code2	There are 5 data in the menu(Factory using)
Field Type	Different exciting frequency ,4 kinds.
Sensor Fact	"Sensor Fact" is printed on the Label of the sensor when it is made in factory. The "sensor Fact" has to be set into Sensor Coefficient Parameter when it runs with converter. **Customer not allowed to change ,except for re-calibrated**
Meter Fact	The value if set for the converter in the factory. This fact is the special one of sensor-made-factory and the factory use this fact to make sure all the instruments can interchange by 0.1%.**Not allowed to change**
MeterCode1/Code2	NO USE(Reserved for further function)
Line Crc Ena	Not Suggest using this function, so no more details to introduce. If need, please associate with our engineer.
Lineary CRC1	
Linearyfact1	
Lineary CRC2	
Linearyfact2	
Lineary CRC3	
Linearyfact3	
Lineary CRC4	
Linearyfact4	

5.Operating

5.1Setting parameters

1	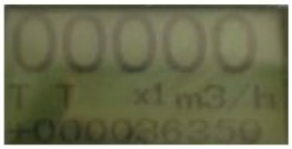	1:Measuring display 2:Press button, would comes to the next picture
2		1: waiting for 3 seconds
3	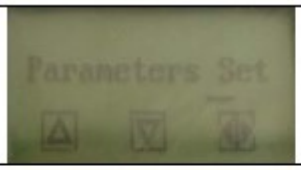	1:comes to the "patameters set" menu. Also a cursor below the first line.
4	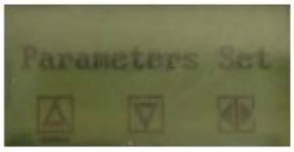	1:Press the button, and move the cursor to the up symbol;
5		1:Press button, comes 5 zero.

6	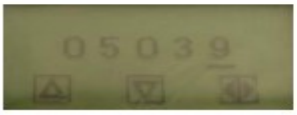	1: Use to move the cursor, and with Up and Down key to input the password "05039"
7	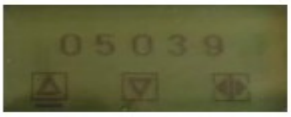	1:Press the button, and move the cursor to the up symbol, and press the button
8	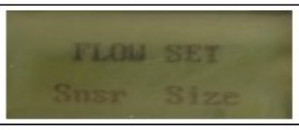	1:Now comes to the Flow Set menu. The first submenu is " Snsr Size"
8-1	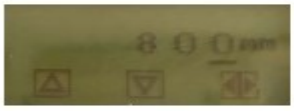	1:Press the button, can enter the submenu. 2:To press the UP or DOWN button, can change the size
8-2	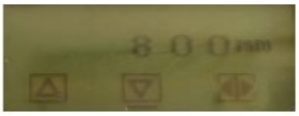	1:when finish setting the size, use button ,move the cursor to DOWN symbol, and press button, it will be saved.
8-3	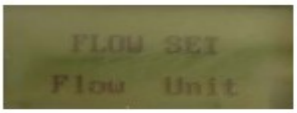	1: Using button, another submenu in the same column comes.
9	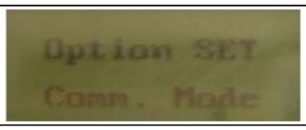	1: Using button, another submenu in different column comes
10		1: After all the parameters setting, press button, comes to the "EXIT PROGRAM" menu. 2: Press button, will back to the measuring display.

5.2 The product function introduction

Simulated current output

Load resistor: 0~750Ω .

Basic Errors: 0.1%±10μA.

Digital frequency output

Frequency output range: 1～5000Hz;

Output electric isolate: Photoelectric isolate. Isolate voltage: > 1000VDC;

Frequency output drive: output by field-effect transistors, the highest subjected voltage is 36VDC, maximum of output current is 250 mA.

Digital pulse output

Pulse output range: 0 ～100 pulse/s。(When higher than upper limit, pulse will lose);

Pulse output value: 0.001～1.000 m^3 / cp 0.001～1.000 Ltr / cp

Pulse output width: 50ms,

Pulse output isolate: photo electricity isolate. Isolate voltage: > 1000VDC;

Pulse output drive: output by field-effect transistors, the highest subjected voltage is 36VDC, maximum of output current is 250 mA.

Alarm output

Alarm output junction: ALMH--- upper limit; ALML--- lower limit;

Output isolate: photo electricity isolate. Isolate voltage: > 1000VDC;

Alarm output drive: output by Darlington pipe, the highest subjected voltage is 36VDC, maximum of output current is 250 mA.

Digital communication port and protocol

MODBUS interface: format of RTU.

HART interface: designed by standard of HART , if you choose our hand held unit , you can display the measure value on line and setting the parameters.

6.Appendix

6.1The Converter adjust preparative

When the converter is running 15 minutes, the inner of converter becomes stabilization. Preparative 0.1% amperemeter or 250Ω、 0.1% voltage instrument.

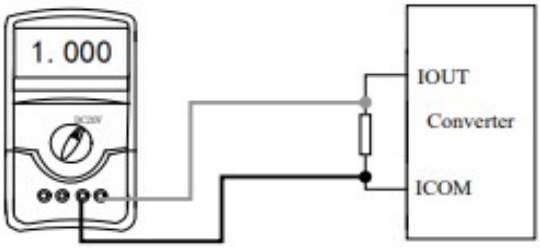

Fig.8.7

Current zero correct

When the converter getting into parameter setting, selecting to "Analog Zero" and enter to it. The standard of signal fountain getting to "0".Adjust parameter make amperemeter is 4mA(±0.004mA).

The full scale current correct

To select "Anlg Range" to enter.Adjust the converter parameter make amperemeter is 20mA(±0.004mA).Adjust the current zero and the full range, the current function of the converter reached exactness.The line degree of current output of conversion should be controlled within the scope of 0.1%

Current line degree checking

You can place the standard signal source in 75%、50%、25%,and check the line degree of current output.

Remark: After L_MagC electromagnetic flowmeter converter and sensor connect to the pipe (no matter demarcate or use), may do the next work first:

- Connect the pipe fore-and-aft the sensors tighten.
- Make sure the sensor connects the earth.
- Make sure the liquid stillness when regulating zero of the instrument.

Make sure the oxidation velum of sensor makes steadily (electrode and liquid contact continuously about 48 hours).

6.2 Alarm information

PCB of electromagnetic flowmeters converters uses SMT, so for user, it is unable to service, and cannot open the shell of converter.

Intelligent converters have self-diagnose function. Without trouble of power and hardware circuit, the normal trouble can be alarmed correctly.

The trouble is like this:

S ---- System exciting alarm; T ---- Flow empty pipe alarm;

C ---- alarm of elimination of small signals; R ---- alarm of reverse flow;

H ---- Flow high limit alarm; L ---- Flow low limit alarm;